BASIC ELECTRICAL ENGINEERING
ASSIGNMENT QUESTIONS

TOPIC: DC NETWORKS

S. No	Question
1	List the differences between active and passive elements.
2	State and explain Kirchhoff's laws with an example?
3	Distinguish between an ideal and a practical voltage source? Give examples?
4	Distinguish between an ideal and a practical current source? Give examples?
5	Define current and EMF?
6	Compare series and parallel circuits.
7	Two resistors of 40 and 60 ohms in parallel are connected in series with two 0.5 Ohm resistors. Find the voltage across the series resistors and across the parallel resistors when 125 volts is applied to the entire circuit
8	Define the following terms with an example: (i) Active elements (ii) Passive elements
9	State and explain Ohm's law. What are the limitations of Ohm's law?
10	When three resistors are connected in parallel show the relation between obtain the equation for currents
11	What are the basic network elements. Write their volt-ampere relationship.
12	Define network with an example
13	Two 40 W tube lights are ON for a period of six hours a day. Calculate the energy consumed by them in a month?
14	Define the following terms with an example: (i) Unilateral elements (ii) Distributed elements (iii) Linear elements (iv) active elements
15	Explain (i) Practical current source and (ii) Practical voltage source with necessary diagrams.
16	If 'n' number of resistances connected in parallel, derive the expression for the equivalent resistance?
17	A given conductor has a resistance of 2Ω. What is the resistance of another conductor of the same material, which has one half the diameter and three times the length of the given conductor.
18	Two batteries A and B with the internal resistances RA and RB are connected in parallel to supply current of 155A to a load resistance RL. Given EA = 122V, RA = 0.15 ohms and RB = 0.1 ohms and IB = 60A. Calculate EB and power drawn by the load?
19	Write short notes on source transformation
20	Define electric potential, electric current and electric energy
21	Define the following: (i) Potential Difference (ii) Resistance (iii) Inductance (iv) Capacitance (v) Work (vi) Power and (vii) Energy
22	A 100Ω resistance is directly switched on across a 10 V battery. What is the current through resistor? How much is the power loss? Also find the energy consumed in 5 Sec.
23	For the arrangement shown in the figure, find the equivalent circuit capacitance 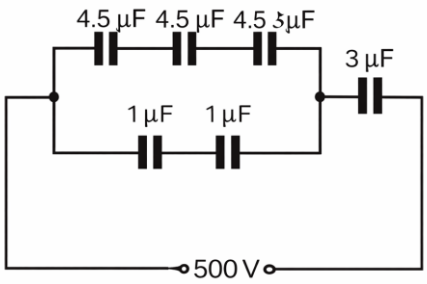

24	Calculate the equivalent resistance R_{ab} for the circuit shown below? 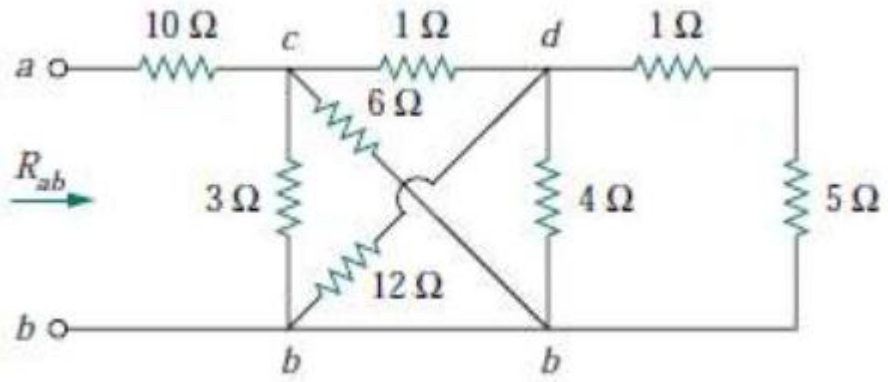
25	Calculate the equivalent inductance for the inductive ladder network shown below? 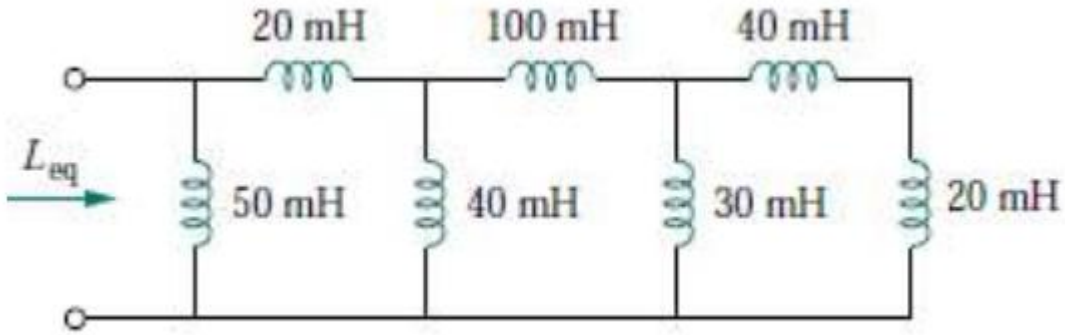
26	Find R_{ab} for the circuit shown below? 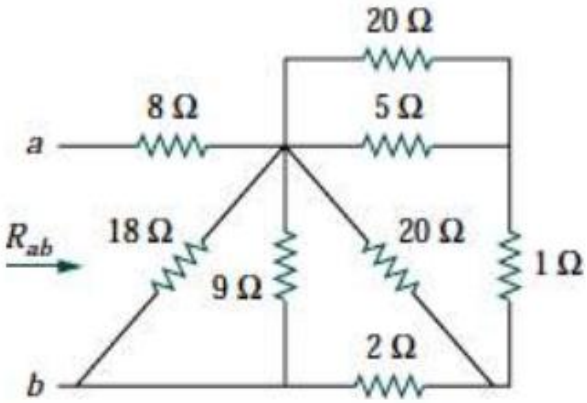
27	Find the current 'i' in the circuit shown in the figure below 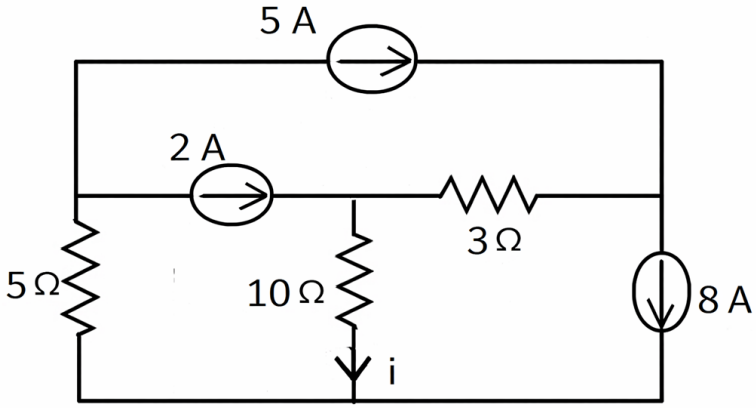

28	By applying Kirchhoff's law, find the current through all the elements in the circuit as shown in the Figure? 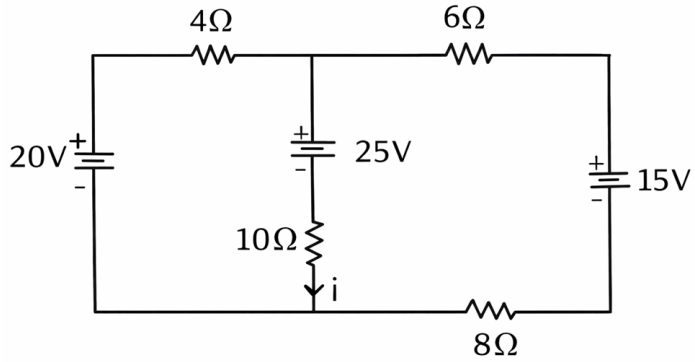
29	Calculate the current through the resistance of 5 ohms in the specified direction as shown in the figure 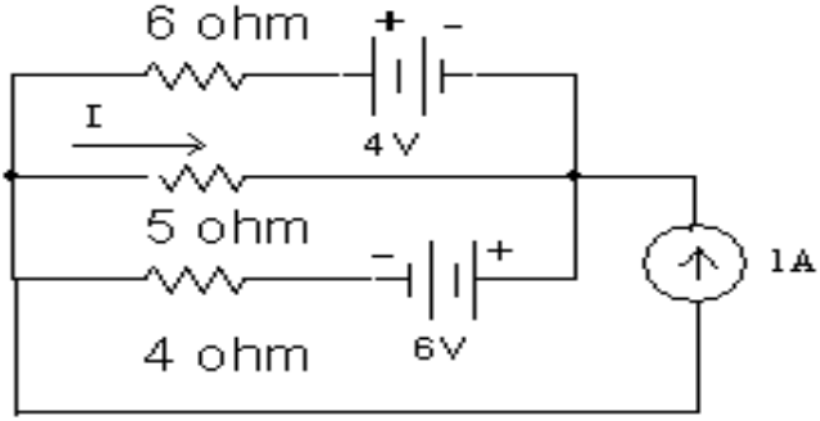
30	For the circuit shown in figure, find the current through 20 Ω resistor? 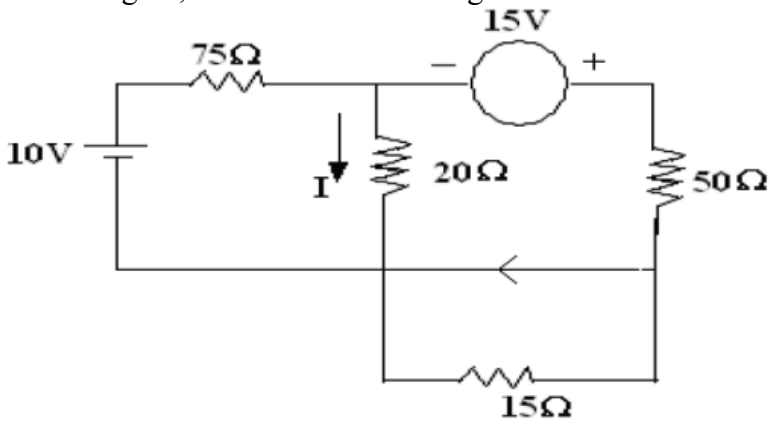
31	Find the value of resistance "R" and voltage across 12Ω for the network shown below: 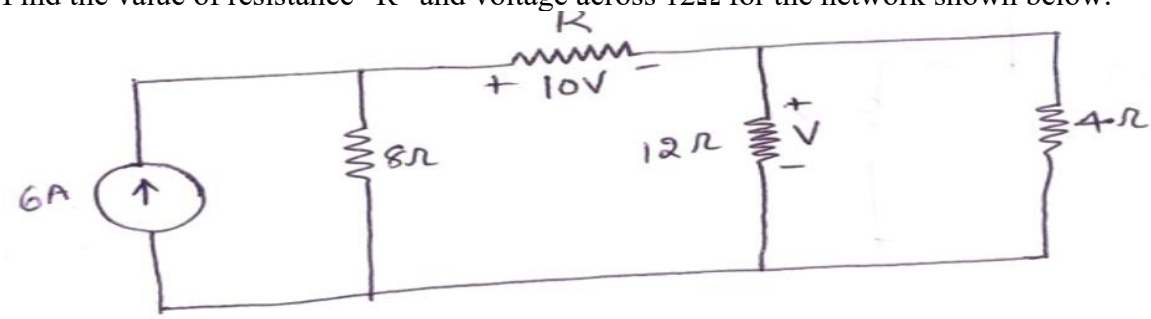

32	Determine the currents I_1 and I_2 in the circuit shown below 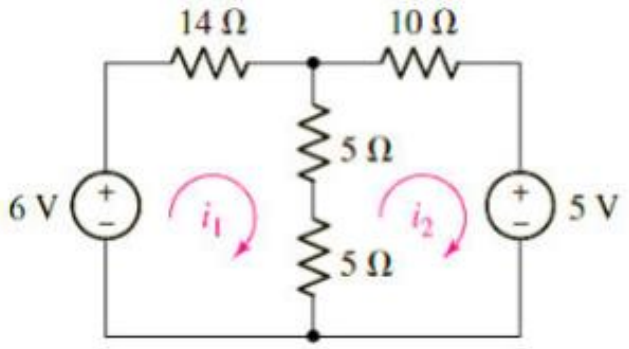
33	Determine the currents I_1 and I_2 in the circuit shown below 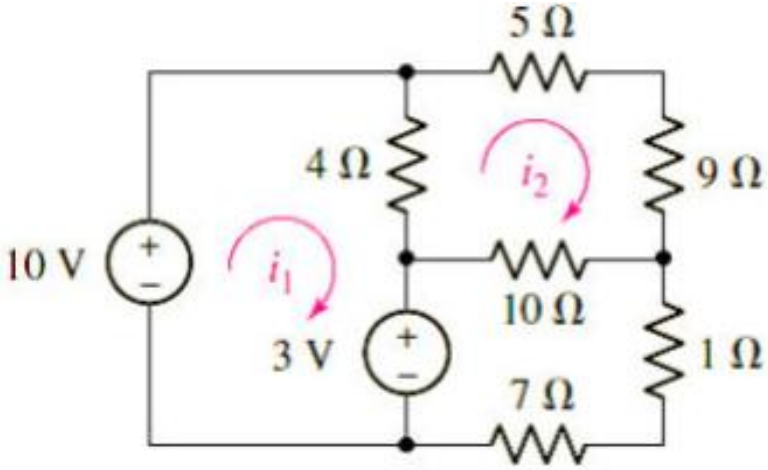
34	Use mesh analysis to determine the three mesh currents in the circuit shown in below figure 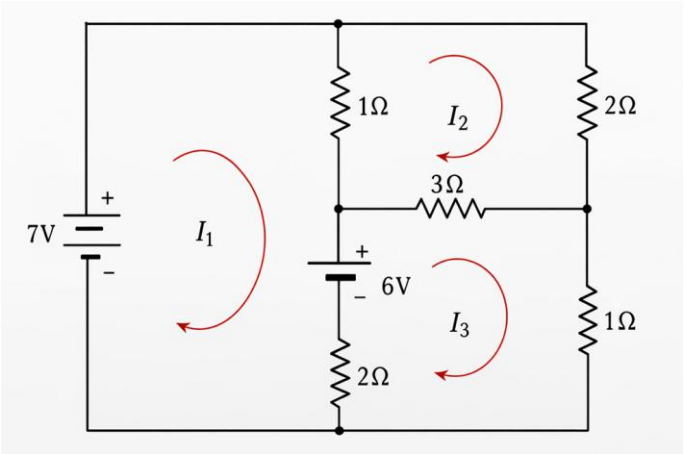
35	Find the current in 23 ohm resistor using superposition theorem for the circuit shown 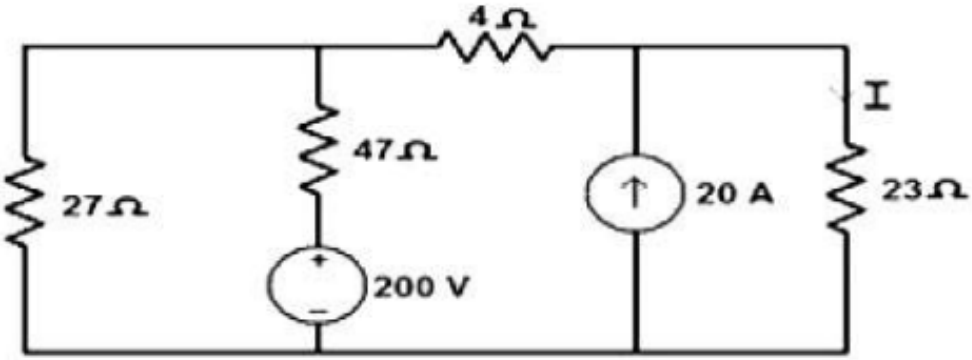

36	Obtain the numerical values for each of the mesh currents identified in the circuit 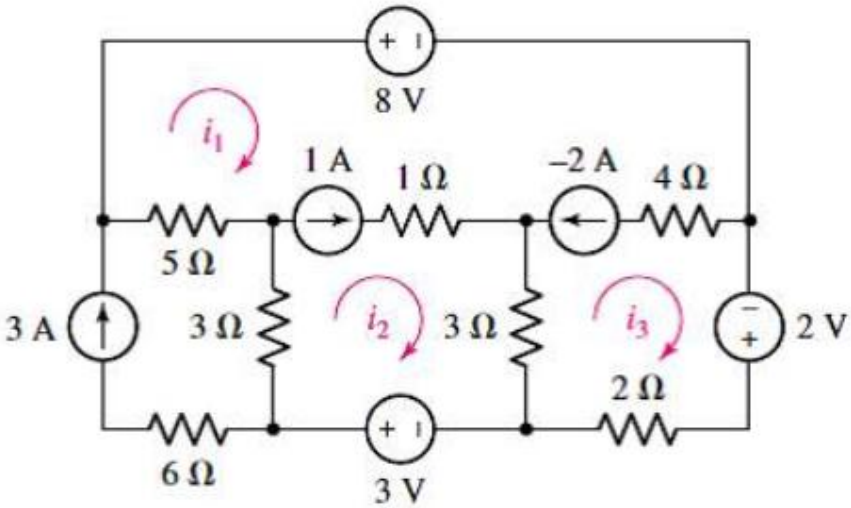
37	Find the voltage across 12Ω resistance in the below figure 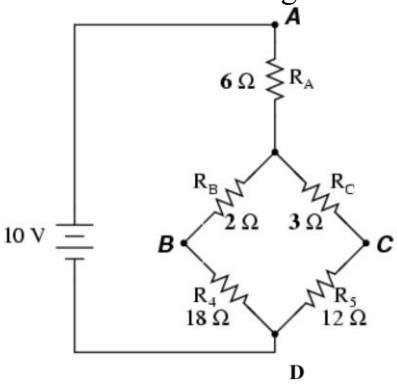
38	Determine the current through 1Ω resistor for the circuit shown in Figure 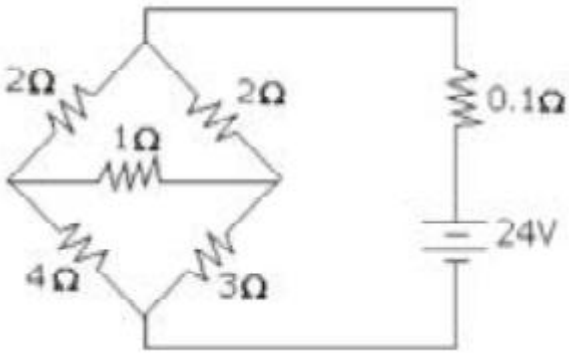
39	Find the effective resistance between P and Q by Star-Delta conversion as shown in figure. 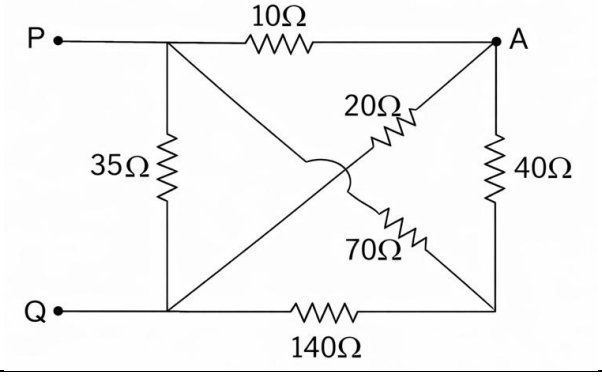

40	For the circuit shown in figure, find all the branch currents using nodal analysis. Also show that total power delivered is equal to total power dissipated. 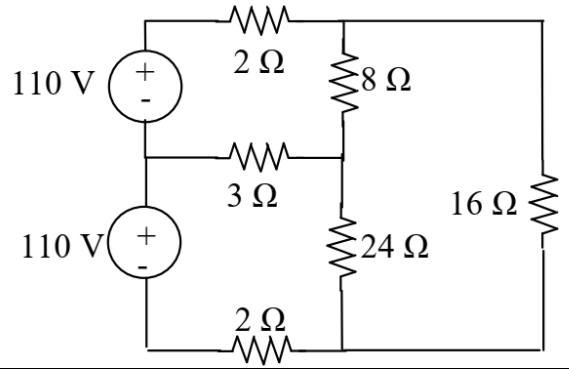
41	Determine the voltage V in the circuit shown in figure 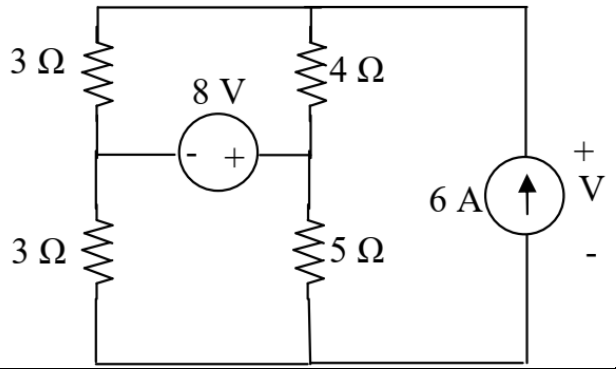
42	Determine the current in the 4Ω branch in the circuit shown in figure 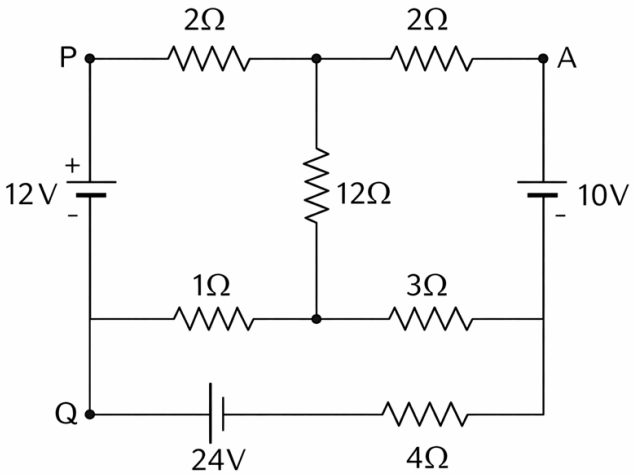
43	Find the equivalent resistance R_{ab} in the circuit 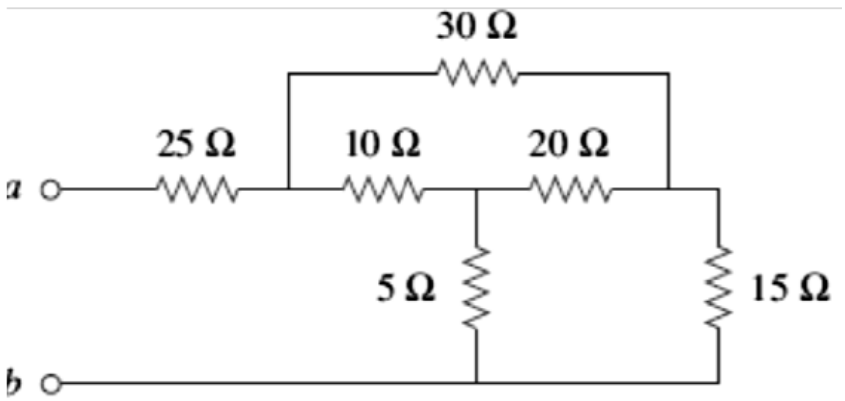

44	Using node analysis, find I for the circuit diagram shown below: 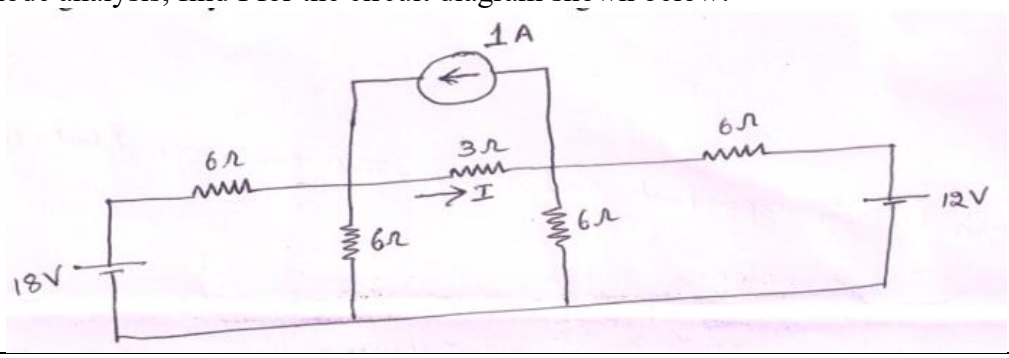
45	Find the equivalent resistance for the network shown across the terminals P and Q 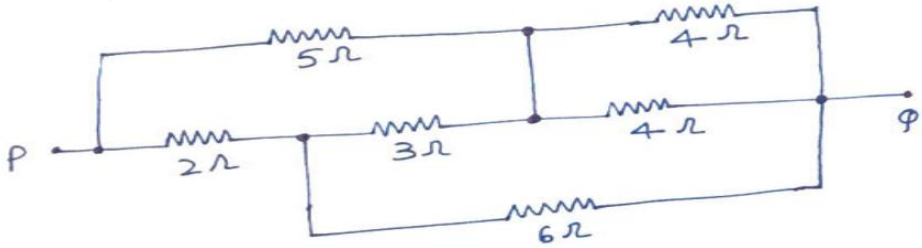
46	A series parallel resistor circuit is shown in Fig. Determine (a) Equivalent resistance across the battery terminals. (b) Current supplied by the battery. (c) Current through 4 resistor. (d) Equivalent resistance of the circuit with an open circuit at point M. (e) Equivalent resistance of the circuit with points N and P short circuited. (f) Equivalent resistance of the circuit with points L and N short circuited 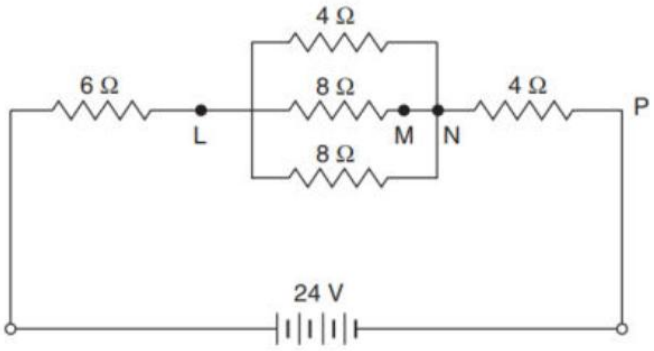
47	A 4μF capacitor is connected in parallel with a 6μF capacitor. This arrangement is then connected in series with a 10μF capacitor. A supply voltage of 250V is connected across the circuit. Find (a) the equivalent capacitance of the circuit, (b) the voltage across the 10 μF capacitor, and (c) the charge on each capacitor
48	Using the KCL and KVL equations, find the V_{ab} in the following circuit 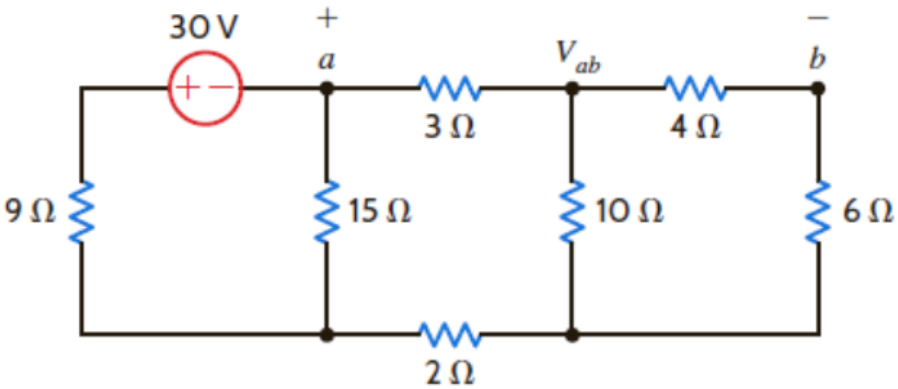

49	Two 6 μF capacitors are connected in series with one having a capacitance of 12 μF. Find the total equivalent circuit capacitance. What capacitance must be added in series to obtain a capacitance of 1.2 μF?
50	Calculate the effective resistance between the points A and B in the circuit shown in figure. Derive the formulae used. 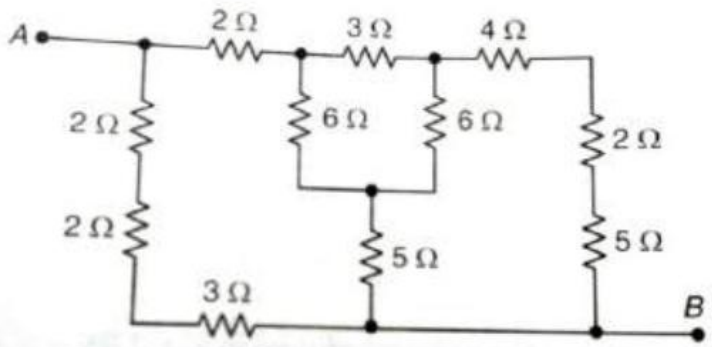
5`	Find the current flowing through various branches in the circuit shown 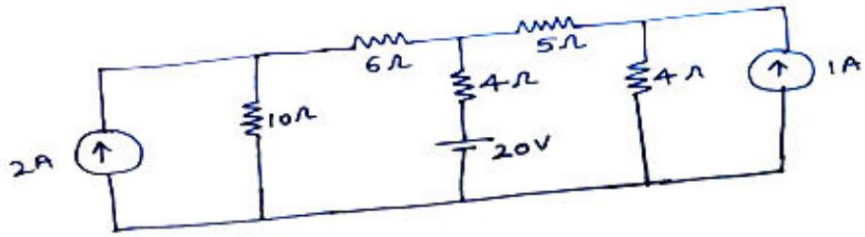
52	Calculate V and I in the circuit shown in figure. 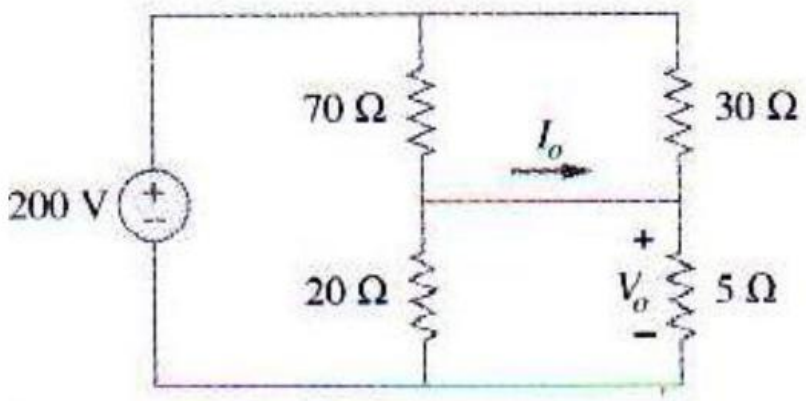
53	Two batteries E1 and E2 having e.m.fs of 6V and 2V respectively and internal resistances of 2 and 3 ohms are connected in parallel across a 5 ohm resistor. Calculate i) the current through each battery (ii) terminal voltage and (iii) energy dissipated in 5 ohm resistor in 10 minutes.
54	In the circuit shown in figure, find the current through 8 Ω branch 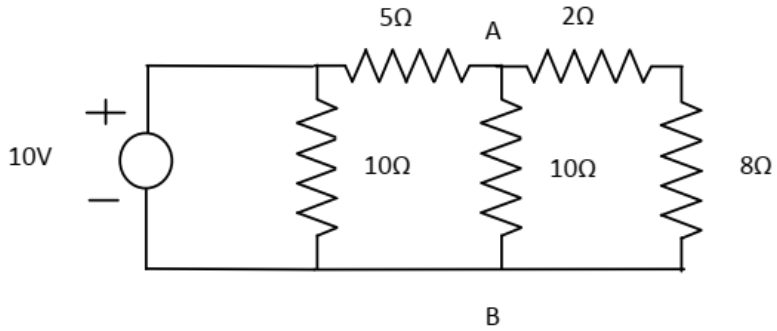

55	Calculate the current supplied by the battery for the network shown below: 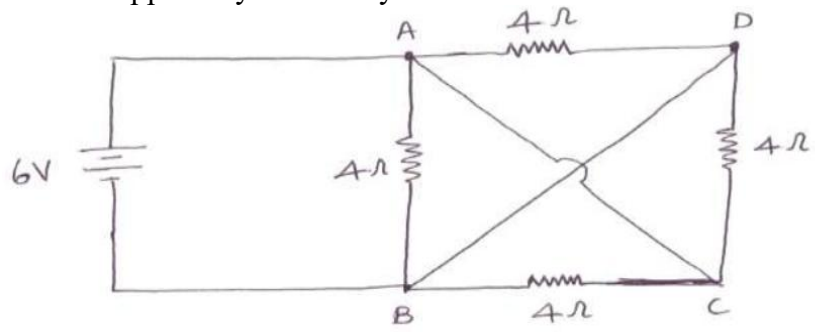
56	Find the voltage drop across the 10Ω resistor for the network shown below 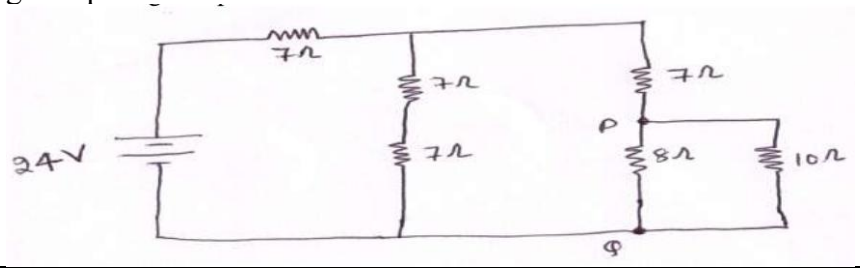
57	Calculate the current supplied by the battery for the circuit shown below: 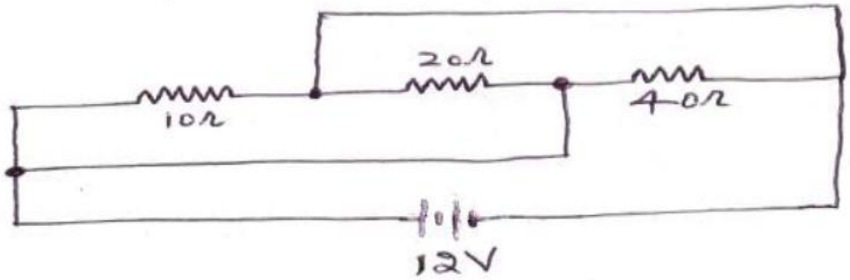
58	Find the equivalent resistance across X–Y for the circuit shown below 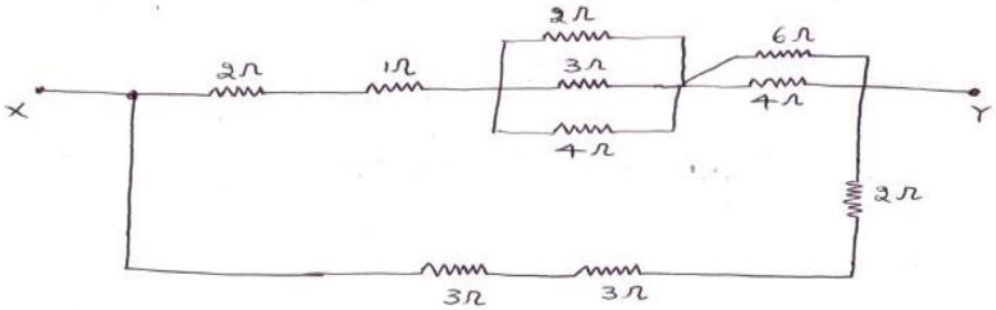
59	What is the equivalent resistance between the terminals, AB in the following circuit? 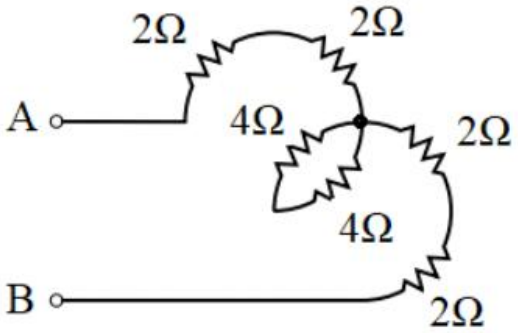

60	In the following given circuit, capacitors P, Q and R are identical and the total equivalent capacitance of the circuit is 3 μF. Determine the values P, Q and R 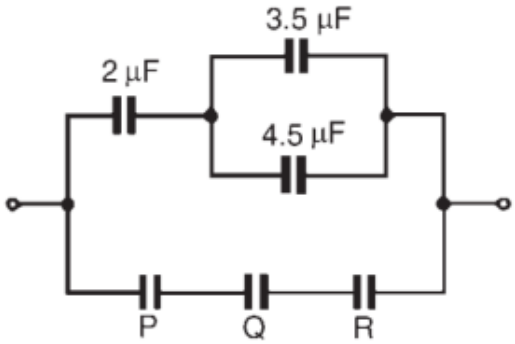
61	Determine the voltage across the terminals 'ab' in the following given circuit when R_L=0 Ω and R_L=10 Ω? 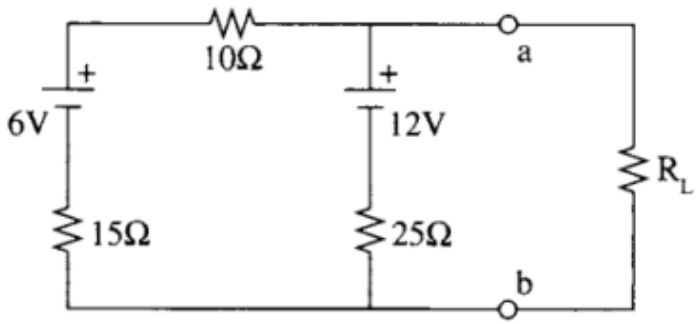
62	Determine the current supplied by the source in the following circuit 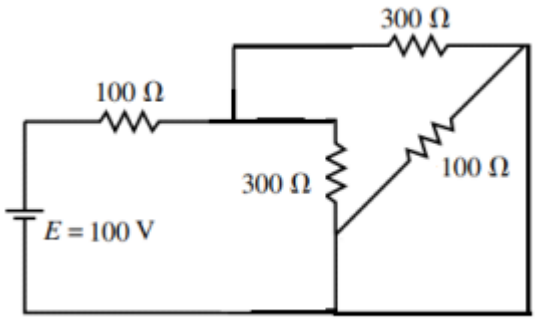
63	If 100V DC supply is given across the terminals 'ab' of the following circuit then what is voltage across the 15 Ω resistance? 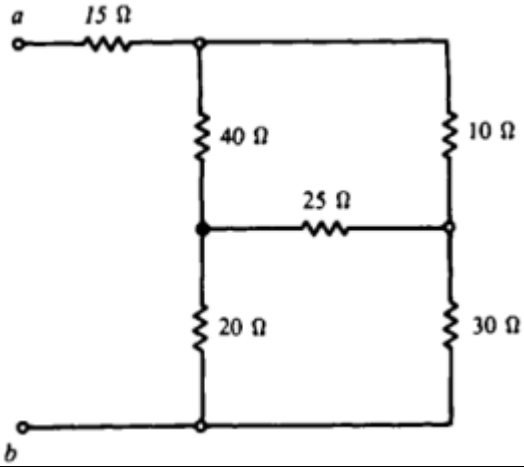

64	What is the current flowing in the following given circuit? 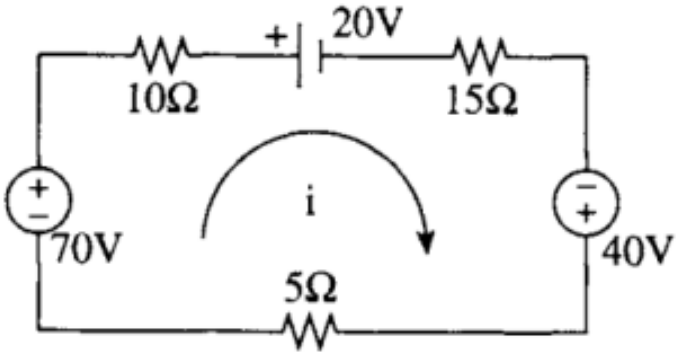
65	For the following given circuits, calculate the equivalent resistance between the terminals. 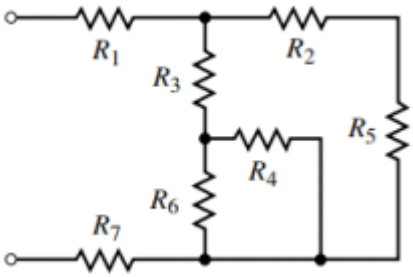 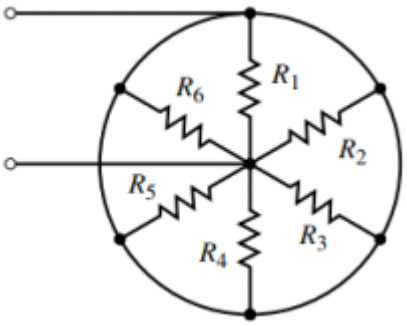
66	Calculate the current supplied by the 12 V battery for the network shown below: 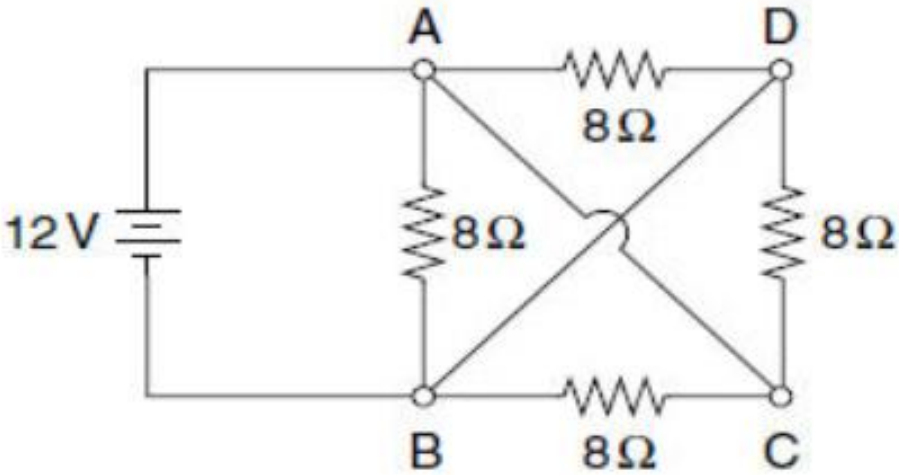
67	For the following circuit, use Nodal analysis to determine V_x and V_y. What is the power consumed by the 6 resistance? 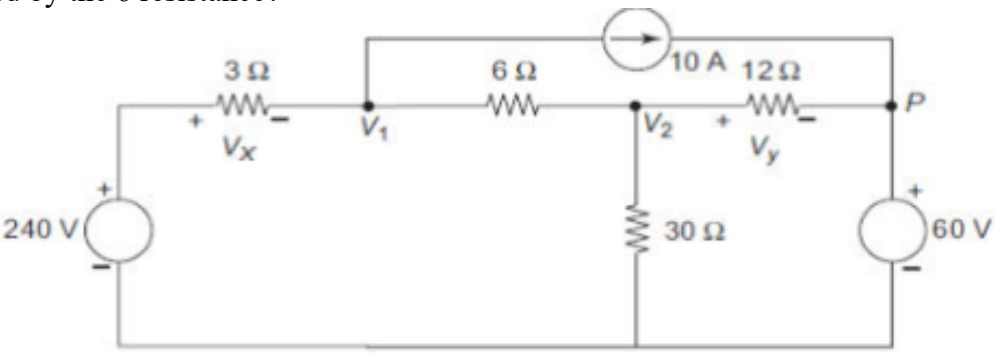

68	By using the mesh analysis determine the loop currents in the following circuit 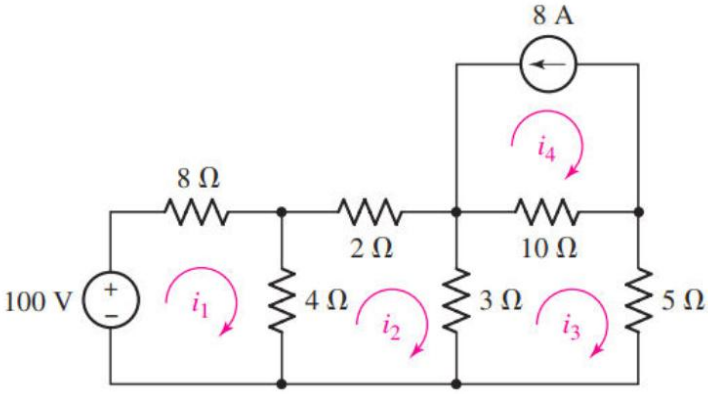
69	Find R_{ab} for the following circuit 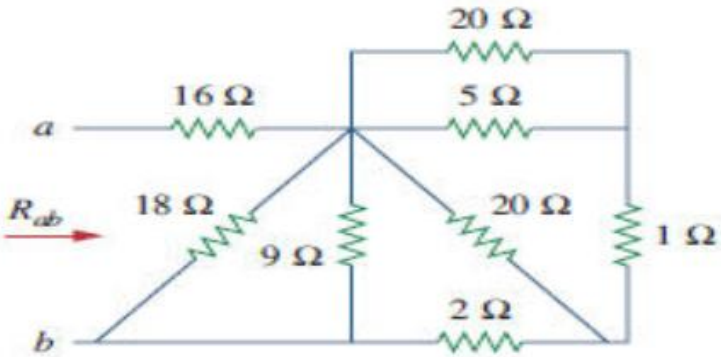
70	Find all branch currents for the network shown below 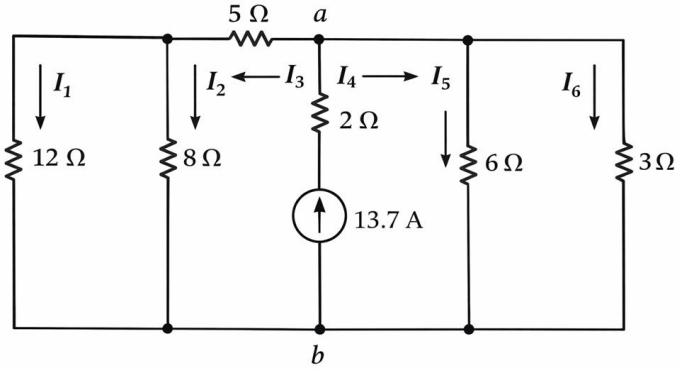
71	Using nodal analysis, determine the voltage between the points, P and Q shown in below figure. 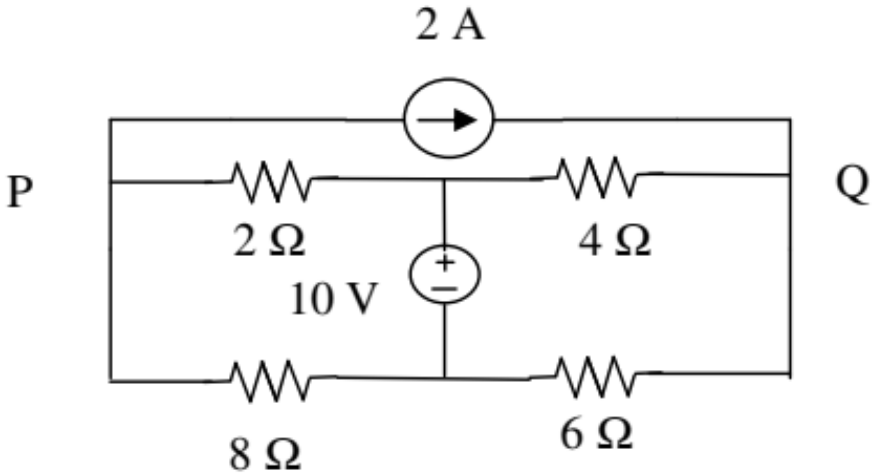

72	Find the current I_1 for the following circuit. 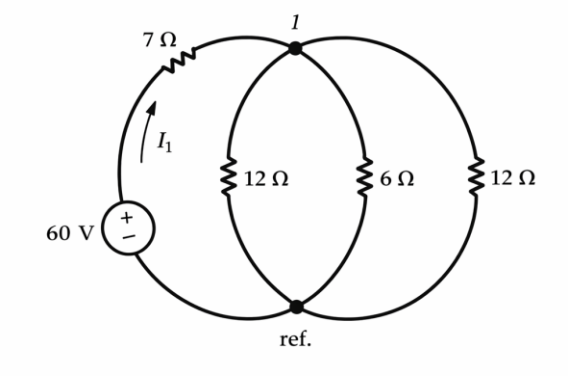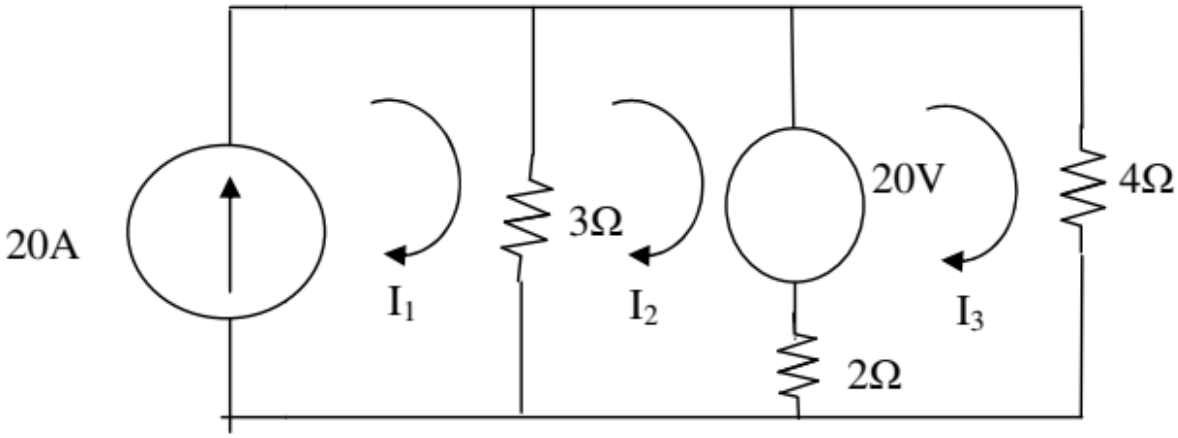
73	Write the mesh equation for the circuit shown in figure and determine the currents I_1, I_2 & I_3.